Pearson Edexcel

Mark Scheme

Summer 2023

Pearson Edexcel GCE
In A Level Further Mathematics (9FM0)
Paper 4D Pure Mathematics

Edexcel and BTEC Qualifications

Edexcel and BTEC qualifications are awarded by Pearson, the UK's largest awarding body. We provide a wide range of qualifications including academic, vocational, occupational and specific programmes for employers. For further information visit our qualifications websites at www.edexcel.com or www.btec.co.uk. Alternatively, you can get in touch with us using the details on our contact us page at www.edexcel.com/contactus.

Pearson: helping people progress, everywhere

Pearson aspires to be the world's leading learning company. Our aim is to help everyone progress in their lives through education. We believe in every kind of learning, for all kinds of people, wherever they are in the world. We've been involved in education for over 150 years, and by working across 70 countries, in 100 languages, we have built an international reputation for our commitment to high standards and raising achievement through innovation in education. Find out more about how we can help you and your students at: www.pearson.com/uk

Summer 2023
Publications Code 9FM0_4D_2306_MS*
All the material in this publication is copyright
© Pearson Education Ltd 2023

General Marking Guidance

- All candidates must receive the same treatment. Examiners must mark the first candidate in exactly the same way as they mark the last.
- Mark schemes should be applied positively. Candidates must be rewarded for what they have shown they can do rather than penalised for omissions.
- Examiners should mark according to the mark scheme not according to their perception of where the grade boundaries may lie.
- There is no ceiling on achievement. All marks on the mark scheme should be used appropriately.
- All the marks on the mark scheme are designed to be awarded. Examiners should always award full marks if deserved, i.e. if the answer matches the mark scheme. Examiners should also be prepared to award zero marks if the candidate's response is not worthy of credit according to the mark scheme.
- Where some judgement is required, mark schemes will provide the principles by which marks will be awarded and exemplification may be limited.
- When examiners are in doubt regarding the application of the mark scheme to a candidate's response, the team leader must be consulted.
- Crossed out work should be marked UNLESS the candidate has replaced it with an alternative response.

EDEXCEL GCE MATHEMATICS

General Instructions for Marking

1. The total number of marks for the paper is 75.

2. The Edexcel Mathematics mark schemes use the following types of marks:

- **M** marks: method marks are awarded for 'knowing a method and attempting to apply it', unless otherwise indicated.
- **A** marks: Accuracy marks can only be awarded if the relevant method (M) marks have been earned.
- **B** marks are unconditional accuracy marks (independent of M marks)
- Marks should not be subdivided.

3. Abbreviations

These are some of the traditional marking abbreviations that will appear in the mark schemes.

- bod – benefit of doubt
- ft – follow through
- the symbol √ will be used for correct ft
- cao – correct answer only
- cso - correct solution only. There must be no errors in this part of the question to obtain this mark
- isw – ignore subsequent working
- awrt – answers which round to
- SC: special case
- oe – or equivalent (and appropriate)
- dep – dependent
- indep – independent
- dp decimal places
- sf significant figures
- ∗ The answer is printed on the paper
- ⌐ The second mark is dependent on gaining the first mark

4. For misreading which does not alter the character of a question or materially simplify it, deduct two from any A or B marks gained, in that part of the question affected.

5. Where a candidate has made multiple responses and indicates which response they wish to submit, examiners should mark this response.
   If there are several attempts at a question which have not been crossed out, examiners should mark the final answer which is the answer that is the most complete.

6. Ignore wrong working or incorrect statements following a correct answer.

7. Mark schemes will firstly show the solution judged to be the most common response expected from candidates. Where appropriate, alternatives answers are provided in the notes. If examiners are not sure if an answer is acceptable, they will check the mark scheme to see if an alternative answer is given for the method used.

Question	Scheme	Marks	AOs
1(a)	54	B1	1.1b
		(1)	
(b)	$C_1(=17+8+17+11+18)=71$ $C_2(=17+6+29+17+21)=90$	B1 B1	1.1b 1.1b
		(2)	
(c)	SAFDET	B1	1.1b
		(1)	
(d)	Use of max-flow min-cut theorem Identification of cut through FT, FE, DF, AD, BD, CD and CE Value of flow = 56 Therefore it follows that flow is maximal	M1 A1 A1	2.1 3.1a 2.2a
		(3)	
			(7 marks)

Notes:

(a) B1: CAO

(b) B1: CAO for C_1

B1: CAO for C_2

(c) B1: CAO

(d) M1: Construct argument based on max-flow min-cut theorem (e.g. attempt to find a cut through arcs – must contain source on one side and sink on the other). Allow a cut drawn on the diagram (need not be the correct one). If cut not drawn, must list arcs not values.

A1: Use appropriate process of finding a minimum cut – FT, FE, DF, AD, BD, CD and CE plus value correct and value of flow through the network stated correctly (56)

A1: Correct deduction that the flow is maximal – must use all four words ‘maximum’, ‘flow’, ‘minimum’ and ‘cut’ (allow use of max and min) dependent on previous A1.

Question	Scheme	Marks	AOs
2	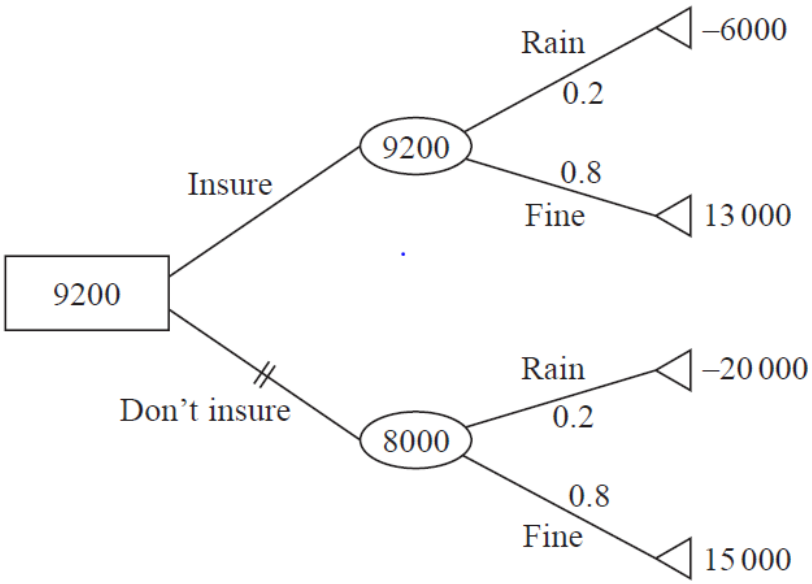 The theatre owner <u>should</u> take out the insurance	M1 A1 A1 M1 A1	3.3 1.1b 3.4 3.4 1.1b
		(5)	
			(5 marks)

Notes:

M1: tree diagram with at least four end pay-offs, one decision node and two chance nodes used correctly (may not have all shapes drawn e.g. no triangles on end pay-offs)

A1: correct structure of tree diagram with each arc labelled correctly with word and associated probabilities (condone incorrect shapes for decision and chance nodes)

A1: at least three end pay-offs correct including triangles; all four attempted (not dependent on previous A mark so M1 A0 A1 is possible)

M1: both chance nodes completed with at least one value correct. Must be filled in on their diagram.

A1: cao for chance and decision nodes (all three correctly filled in on diagram) + clear conclusion 'insure' including double line through the inferior option.

<table>
<tr><th>Question</th><th>Scheme</th><th>Marks</th><th>AOs</th></tr>
<tr><td>3(a)</td><td>$\sum x_{\mathrm{A}j} \leqslant 45 \quad \sum x_{\mathrm{B}j} \leqslant 27 \quad \sum x_{\mathrm{C}j} \leqslant 34 \quad \sum x_{\mathrm{D}j} \leqslant 50$
$\sum x_{i\mathrm{Q}} \geqslant 75 \quad \sum x_{i\mathrm{R}} \geqslant 37 \quad \sum x_{i\mathrm{S}} \geqslant 44$</td><td>M1
A1</td><td>3.3
2.5</td></tr>
<tr><td></td><td></td><td>(2)</td><td></td></tr>
<tr><td>(b)</td><td><table><tr><td></td><td>Q</td><td>R</td><td>S</td></tr><tr><td>A</td><td>45</td><td></td><td></td></tr><tr><td>B</td><td>27</td><td></td><td></td></tr><tr><td>C</td><td>3</td><td>31</td><td></td></tr><tr><td>D</td><td></td><td>6</td><td>44</td></tr></table></td><td>B1</td><td>1.1b</td></tr>
<tr><td></td><td></td><td>(1)</td><td></td></tr>
<tr><td>(c)</td><td><table><tr><td></td><td>Q</td><td>R</td><td>S</td></tr><tr><td>A</td><td>$45-\theta$</td><td></td><td>θ</td></tr><tr><td>B</td><td>(27)</td><td></td><td></td></tr><tr><td>C</td><td>$3+\theta$</td><td>$31-\theta$</td><td></td></tr><tr><td>D</td><td></td><td>$6+\theta$</td><td>$44-\theta$</td></tr></table> giving <table><tr><td></td><td>Q</td><td>R</td><td>S</td></tr><tr><td>A</td><td>14</td><td></td><td>31</td></tr><tr><td>B</td><td>27</td><td></td><td></td></tr><tr><td>C</td><td>34</td><td></td><td></td></tr><tr><td>D</td><td></td><td>37</td><td>13</td></tr></table></td><td>M1
A1</td><td>2.1
2.2a</td></tr>
<tr><td></td><td></td><td>(2)</td><td></td></tr>
<tr><td>(d)</td><td><table><tr><td></td><td></td><td>23</td><td>16</td><td>12</td></tr><tr><td></td><td></td><td>Q</td><td>R</td><td>S</td></tr><tr><td>0</td><td>A</td><td>X</td><td>2</td><td>X</td></tr><tr><td>–15</td><td>B</td><td>X</td><td>9</td><td>17</td></tr><tr><td>–12</td><td>C</td><td>X</td><td>10</td><td>21</td></tr><tr><td>–1</td><td>D</td><td>–3</td><td>X</td><td>X</td></tr></table>
<table><tr><td></td><td>Q</td><td>R</td><td>S</td></tr><tr><td>A</td><td>$14-\theta$</td><td></td><td>$31+\theta$</td></tr><tr><td>B</td><td></td><td></td><td></td></tr><tr><td>C</td><td></td><td></td><td></td></tr><tr><td>D</td><td>θ</td><td></td><td>$13-\theta$</td></tr></table> giving <table><tr><td></td><td>Q</td><td>R</td><td>S</td></tr><tr><td>A</td><td>1</td><td></td><td>44</td></tr><tr><td>B</td><td>27</td><td></td><td></td></tr><tr><td>C</td><td>34</td><td></td><td></td></tr><tr><td>D</td><td>13</td><td>37</td><td></td></tr></table>
Entering cell is DQ and exiting cell is DS</td><td>M1
A1

M1

A1</td><td>2.1
1.1b

1.1b

2.2a</td></tr>
<tr><td></td><td></td><td>(4)</td><td></td></tr>
<tr><td colspan="4">(9 marks)</td></tr>
<tr><td colspan="4"></td></tr>
<tr><td colspan="4"></td></tr>
</table>

Notes:
(a) M1: At least five equations or inequalities with unit coefficients (with at least 3 correct) **A1:** CAO must be inequalities – check signs and notation carefully. If individual terms written out in full check suffices. **(b) B1:** CAO for north-west corner method **(c) M1:** A valid route shown, AS chosen as entering cell, only one empty square used, θs balance **A1:** CAO (with no zero in cell CR) **(d) M1:** Finding 7 shadow costs and 6 improvement indices (no additional zeroes but condone if clearly differentiated) **A1:** CAO (Alternative shadow costs: columns 0, -7, -11 rows 23, 8, 11, 22) **M1:** A valid route shown, their most negative II chosen, only one empty square used, θs balance **A1:** cao – including the deduction of both entering and exiting cells

Question	Scheme	Marks	AOs
4(a)	Since maximising, subtract all elements from some value $\geqslant 52$ e.g. $\begin{bmatrix} 18 & 32 & 34 & 37 \\ 3 & 21 & 40 & 18 \\ 4 & 25 & 29 & 26 \\ 0 & 7 & 10 & 10 \end{bmatrix}$	B1	1.1b
	Reduce rows $\begin{bmatrix} 0 & 14 & 16 & 19 \\ 0 & 18 & 37 & 15 \\ 0 & 21 & 25 & 22 \\ 0 & 7 & 10 & 10 \end{bmatrix}$ and then columns $\begin{bmatrix} 0 & 7 & 6 & 9 \\ 0 & 11 & 27 & 5 \\ 0 & 14 & 15 & 12 \\ 0 & 0 & 0 & 0 \end{bmatrix}$	M1 A1	2.1 1.1b
	$\begin{bmatrix} 0 & 2 & 1 & 4 \\ 0 & 6 & 22 & 0 \\ 0 & 9 & 10 & 7 \\ 5 & 0 & 0 & 0 \end{bmatrix}$ followed by $\begin{bmatrix} 0 & 1 & 0 & 3 \\ 1 & 6 & 22 & 0 \\ 0 & 8 & 9 & 6 \\ 6 & 0 & 0 & 0 \end{bmatrix}$ or $\begin{bmatrix} 0 & 1 & 0 & 4 \\ 0 & 5 & 21 & 0 \\ 0 & 8 & 9 & 7 \\ 6 & 0 & 0 & 1 \end{bmatrix}$	M1 A1ft A1	2.1 1.1b 1.1b
	Optimal allocation is A = 3, B = 4, C = 1, D = 2	A1ft	2.2a
		(7)	
(b)	Total score = 18 + 34 + 48 + 45 = 145	B1	2.2a
		(1)	
			(8 marks)

Notes:

(a) B1: converting correctly from a minimisation to maximisation

M1: simplifying the initial matrix by reducing rows and then columns (allow up to 2 independent slips)

A1: CAO

M1: develop an improved solution – need to see one double covered +e; one uncovered –e; and one single covered unchanged. 2 lines needed to 3 lines needed (lines may be implied). If lines are drawn they must be correct.

A1ft: CAO following on from row and column reduction from previous table (f/t from previous table with no further slips)

A1: CSO on final table (so must have scored all previous marks)

A1ft: correct allocation ft their optimal table (both previous M marks must have been awarded in (a)) (Must be fully written. Do not accept just indicated on zeroes on final matrix)

(b) B1: CAO – solution of original problem (both previous M marks must have been awarded)

Question	Scheme	Marks	AOs
4(a)	Special Case – minimisation – max 4/8	B0	
	Reduce rows $\begin{bmatrix} 19 & 5 & 3 & 0 \\ 37 & 19 & 0 & 22 \\ 25 & 4 & 0 & 3 \\ 10 & 3 & 0 & 0 \end{bmatrix}$ and then columns $\begin{bmatrix} 9 & 2 & 3 & 0 \\ 27 & 16 & 0 & 22 \\ 15 & 1 & 0 & 3 \\ 0 & 0 & 0 & 0 \end{bmatrix}$	M1 A1	
	followed by $\begin{bmatrix} 8 & 1 & 3 & 0 \\ 26 & 15 & 0 & 22 \\ 14 & 0 & 0 & 3 \\ 0 & 0 & 1 & 1 \end{bmatrix}$ or $\begin{bmatrix} 9 & 2 & 4 & 0 \\ 26 & 15 & 0 & 21 \\ 14 & 0 & 0 & 2 \\ 0 & 0 & 1 & 0 \end{bmatrix}$	M1 A1 A0	
	Optimal allocation is	A0	
		(7)	
(b)	Total score	B0	
		(1)	
			(8 marks)

Notes:

(a) **B0:** no conversion

M1: simplifying the initial matrix by reducing rows and then columns (allow up to 2 independent slips)

A1: CAO

M1: develop an improved solution – need to see one double covered +e; one uncovered –e; and one single covered unchanged. 3 lines needed to 4 lines needed (lines may be implied). If lines are drawn they must be correct.

A1: CAO No further marks awarded

Question	Scheme	Marks	AOs
5(a)	$u_{n+2}=\frac{1}{2}\left(u_{n+1}+u_n\right)+3$		
	$v_{n+2}+2(n+2)=\frac{1}{2}\left(v_{n+1}+2(n+1)+v_n+2n\right)+3$	M1	2.1
	$2v_{n+2}-v_{n+1}-v_n=0$	A1	1.1b
	$2m^2-m-1=0\Rightarrow(2m+1)(m-1)=0\therefore m=-0.5$ and 1	dM1	1.1b
	$v_n=A+B\left(-\frac{1}{2}\right)^n$	A1ft	1.1b
	$u_0=15\Rightarrow v_0=15$ $u_1=20\Rightarrow v_1=18$	B1	1.1b
	$A+B=15$ $A-\frac{1}{2}B=18$ and solve for A and B	M1	1.1b
	$u_n=17-2\left(-\frac{1}{2}\right)^n+2n$	A1	2.2a
		(7)	
(b)	As $n\to\infty$, the terms of u_n are (approximately) given by the linear expression $17+2n$	B1	2.4
		(1)	
			(8 marks)

Notes:

(a) M1: Substituting $u_n=v_n+2n$ to obtain a second-order recurrence relation in v_n only

A1: CAO Correct homogeneous second-order recurrence relation

dM1: Solving their three-term auxiliary equation (dependent on previous M mark) (if no auxiliary equation seen, correct expression implies this mark)

A1ft: Correct general solution for v_n following their roots or complimentary function if they do not obtain homogeneous relationship.

B1: Either converting the first two given values for the sequence for u to v or for stating the corresponding general solution for u_n

M1: Setting up two equations using their solution and solving for their A and B (if correct $A = 17$ and $B = -2$) (dependent on general solution of the form $A+B(\alpha)^n$ *where* α *is* $-\frac{1}{2}$ *or* -2)

A1: CAO (may be an expression without $u_n =$ accept any equivalent form e.g. $u_n = 17 + \left(-\frac{1}{2}\right)^{n-1} + 2n)$

(b) B1: Explanation that as n becomes large the terms of the sequence are (approximately) in arithmetic progression (or equivalent) dependent on correct expression for u_n

Question	Scheme	Marks	AOs
5(a)	Special Case – does not use the transformation Max 6/8		
	$2u_{n+2} - u_{n+1} - u_n = 6$	M0	
		A0	
	$2u_{n+2} - u_{n+1} - u_n = 0$		
	$2m^2 - m - 1 = 0 \Rightarrow (2m+1)(m-1) = 0 \therefore m = -0.5$ and 1	M1	
	C.F. $u_n = A + B\left(-\frac{1}{2}\right)^n$	A1ft	
	Trial solution λn $\lambda(n+2) - \frac{1}{2}\lambda(n+1) - \frac{1}{2}\lambda n = 3$ $\Rightarrow \lambda = 2$ P.S. $2n$ General solution $u_n = A + B\left(-\frac{1}{2}\right)^n + 2n$	B1	
	$A + B = 15$ $A - \frac{1}{2}B = 18$ and solve for A and B	dM1	
	$u_n = 17 - 2\left(-\frac{1}{2}\right)^n + 2n$	A1	
		(7)	
(b)	As $n \to \infty$, the terms of u_n are (approximately) given by the linear expression $17 + 2n$	B1	
		(1)	
			(8 marks)

Notes:

(a) M0: Transformation not used

A0:

M1: Setting up and solving their three-term auxiliary equation (if no auxiliary equation seen, correct expression implies this mark)

A1ft: Correct complementary function for u_n following their roots

B1: Finding the correct particular solution and stating the corresponding general solution for u_n

dM1: Setting up two equations using their solution and solving for their A and B (if correct A = 17 and $B = -2$) dependent on previous M mark (dependent on general solution of the form $A + B(\alpha)^n + Cn$ *where* α *is* $-\frac{1}{2}$ *or* -2)

A1: CAO (may be an expression without $u_n =$ accept any equivalent form e.g. $u_n = 17 + \left(-\frac{1}{2}\right)^{n-1} + 2n$)

(b) B1: Explanation that as n becomes large the terms of the sequence are (approximately) in arithmetic progression (or equivalent) dependent on correct expression for u_n

Question	Scheme	Marks	AOs
6			

Stage	State	Action	Dest.	Value	Marks	AOs
1	H	HS	S	47 – 7 = 40*		
	I	IS	S	49 – 8 = 41*	B1	3.1a
	J	JS	S	48 – 8 = 40*		
2	F	FH	H	44 – 6 + 40 = 78*		
		FI	I	44 – 7 + 41 = 78*		
		FJ	J	44 – 8 + 40 = 76		
	G	GH	H	45 – 7 + 40 = 78	M1	3.1a
		GI	I	45 – 8 + 41 = 78	A1	1.1b
		GJ	J	45 – 6 + 40 = 79*	A1	1.1b
3	C	CF	F	48 – 7 + 78 = 119		
		CG	G	48 – 5 + 79 = 122*		
	D	DF	F	47 – 6 + 78 = 119*	M1	1.1b
		DG	G	47 – 7 + 79 = 119*	A1ft	1.1b
	E	EF	F	49 – 7 + 78 = 120	A1	1.1b
		EG	G	49 – 6 + 79 = 122*		
4	A	AC	C	47 – 3 + 122 = 166*		
		AD	D	47 – 4 + 119 = 162		
		AE	E	47 – 5 + 122 = 164		
	B	BC	C	45 – 5 + 122 = 162*	M1	1.1b
		BD	D	45 – 4 + 119 = 160	A1ft	1.1b
		BE	E	45 – 6 + 122 = 161	A1	1.1b
5	S	SA	A	– 5 + 166 = 161*		
		SB	B	– 2 + 162 = 160	A1	1.1b

Optimal schedule is SACGJS		B1	2.2a
Optimal expected income (£) 16 100		B1	3.2a
		(13)	
			(13 marks)

Notes:
• Condone lack of destination column • Only penalise incorrect result in value – i.e. ignore working values • Penalise absence of state or action column with first two A marks earned only • Penalise empty/errors in stage column with first A mark earned only **For all M marks – must bring optimal results from previous stage into calculation at least once – so from Stage 1 if neither of their 40 or their 41 are used in Stage 2 then M0. Ignore extra rows. Must have correct ingredients (appearance fee, cost) at least once per stage. If no working seen then values in the Value column must be correct to imply these marks. Penalise lack of * only once per question.** B1: CAO (Stage 1) M1: Second stage completed. At least six rows. Bod if something in each cell A1: Any one state correct with no extra rows for this state A1: Both states correct with no extra rows for Stage 2 M1: Third stage completed. At least six rows. Bod if something in each cell A1ft: Any two states correct – ft their optimal values from Stage 2 (no extra rows) A1: All three states correct for Stage 3 (no extra rows) M1: Fourth stage completed. At least six rows. Bod if something in each column A1ft: Any one state correct - ft their optimal values from Stage 3 (no extra rows) A1: Both states correct (no extra rows) A1: Final state correct (no extra rows) B1: Correct route (dependent on all previous M marks earned). (start and/or finish at S may not be stated) B1: CAO (dependent on all previous M marks earned) – units not required – but not for 161

Question	Scheme	Marks	AOs
6	Alternative with values added at subsequent Stage.		

Stage	State	Action	Dest.	Value	Marks	AOs
1	H	HS	S	– 7 = – 7*	B1	3.1a
	I	IS	S	– 8 = – 8*		
	J	JS	S	– 8 = – 8*		
2	F	FH	H	47 – 6 – 7 = 34*		
		FI	I	49 – 7 – 8 = 34*		
		FJ	J	48 – 8 – 8 = 32	M1	3.1a
	G	GH	H	47 – 7 – 7 = 33	A1	1.1b
		GI	I	49 – 8 – 8 = 33	A1	1.1b
		GJ	J	48 – 6 – 8 = 34*		
3	C	CF	F	44 – 7 + 34 = 71		
		CG	G	45 – 5 + 34 = 74*	M1	1.1b
	D	DF	F	44 – 6 + 34 = 72*	A1ft	1.1b
		DG	G	45 – 7 + 34 = 72*	A1	1.1b
	E	EF	F	44 – 7 + 34 = 71		
		EG	G	45 – 6 + 34 = 73*		
4	A	AC	C	48 – 3 + 74 = 119*		
		AD	D	47 – 4 + 72 = 115		
		AE	E	49 – 5 + 73 = 117	M1	1.1b
	B	BC	C	48 – 5 + 74 = 117*	A1ft	1.1b
		BD	D	47 – 4 + 72 = 115	A1	1.1b
		BE	E	49 – 6 + 73 = 116		
5	S	SA	A	47 – 5 + 119 = 161*		
		SB	B	45 – 2 + 117 = 160	A1	1.1b

Optimal schedule is SACGJS	B1	2.2a
Optimal expected income (£) 16 100	B1	3.2a

Notes: as above

Question	Scheme	Marks	AOs
6	Special Case – Working Forwards		

Stage	State	Action	Dest.	Value	Marks
1	S	SA	A	47 – 5 = 42*	B1
		SB	B	45 – 2 = 43*	
2	A	AC	C	48 – 3 + 42 = 87*	
		AD	D	47 – 4 + 42 = 85	
		AE	E	49 – 5 + 42 = 86*	M1
	B	BC	C	48 – 5 + 43 = 86	A1
		BD	D	47 – 4 + 43 = 86*	A0
		BE	E	49 – 6 + 43 = 86*	
3	C	CF	F	44 – 7 + 87 = 124*	
		CG	G	45 – 5 + 87 = 127*	M1
	D	DF	F	44 – 6 + 86 = 124*	A1
		DG	G	45 – 7 + 86 = 124	A0
	E	EF	F	44 – 7 + 86 = 123	
		EG	G	45 – 6 + 86 = 125	
4	F	FH	H	47 – 6 + 124 = 165	M1
		FI	I	49 – 7 + 124 = 166	A0
		FJ	J	48 – 8 + 124 = 164	A0
	G	GH	H	47 – 7 + 127 = 167*	
		GI	I	49 – 8 + 127 = 168*	
		GJ	J	48 – 6 + 127 = 169*	
5	H	HS	S	– 7 + 167 = 160*	A0
	I	IS	S	– 8 + 168 = 160*	
	J	JS	S	– 8 + 169 = 161*	

Optimal schedule is SACGJS — B0

Optimal expected income (£) 16 100 — B0

Max: 6/13

Special Case – ignore stars throughout

B1: CAO (Stage 1)

M1: Second stage completed. At least six rows. Bod if something in each cell

A1: Both states correct with no extra rows for Stage 2 then **A0**

M1: Third stage completed. At least six rows. Bod if something in each cell

A1: Two out of three states with all values correct (no follow through) Then **A0**

M1: Fourth stage completed. At least six rows. Bod if something in each column. No further marks can be awarded

Question	Scheme	Marks	AOs
7(a)	$u_{n+1}=0.75u_n+k$	B1	3.3
	(aux equation $m-0.75=0\Rightarrow$) complementary function is $A(0.75)^n$	B1	1.1b
	Consider a trial solution of the form $u_n=\lambda$ so $\lambda-0.75\lambda=k$	M1	1.1b
	General solution is $u_n=A(0.75)^n+4k$	A1	1.1b
	$u_1=k\therefore 0.75A+4k=k\Rightarrow A=\ldots$	M1	3.4
	$u_n=4k\left(1-(0.75)^n\right)$	A1	2.2a
		(6)	
(b)	$4k\left(1-0.75^8\right)=1750\Rightarrow k=\ldots$	dM1	3.4
	$k=486.1721068\ldots\Rightarrow k=486.18$	A1	2.2a
		(2)	
			(8 marks)

Notes:

(a) B1: CAO

B1: CAO

M1: substituting their trial solution into the recurrence relation (which must be of the form $u_{n+1}=\alpha u_n+k$ *where* $\alpha=0.75$ *or* ± 0.25) in an attempt to find their λ

A1: CAO for the general solution (may be implied by subsequent working)

M1: using the conditions in the model and their expression of the form $A(\alpha)^n+Bk$ *where* α *is* 0.75 *or* $\pm 0,25$ to calculate A (which if correct is $-4k$)

A1: CAO for the particular solution (may be an expression without $u_n=$ accept any equivalent form e.g. $u_n=4k-3k(0.75)^{n-1}$)

(b) dM1: Applying $n=8$ to their general solution of the form $A(\alpha)^n+Bk$ *where* α *is* 0.75 *or* $\pm 0,25$ equal to 1750 (dependent on both M marks in (a))

A1: CAO – must be 486.18

<table>
<tr><th>Question</th><th>Scheme</th><th>Marks</th><th>AOs</th></tr>
<tr><td>8(a)</td><td>Row minima are –3, –1, –2, –4
Column maxima are 4, 2, 5</td><td>M1</td><td>1.1b</td></tr>
<tr><td></td><td>As Row maximin is not equal to Column minimax ($-1 \neq 2$) the game is not stable</td><td>A1</td><td>2.4</td></tr>
<tr><td></td><td></td><td>(2)</td><td></td></tr>
<tr><td>(b)</td><td>Option Q dominates option T</td><td>B1</td><td>1.2</td></tr>
<tr><td></td><td>Because e.g., –3 > –4, 2 > 0 and 5 > 2</td><td>B1</td><td>2.4</td></tr>
<tr><td></td><td></td><td>(2)</td><td></td></tr>
<tr><td>(c)(i)</td><td>e.g., augment by +3 $\begin{pmatrix} -3 & 2 & 5 \\ 2 & -1 & 0 \\ 4 & -2 & -1 \end{pmatrix} \rightarrow \begin{pmatrix} 0 & 5 & 8 \\ 5 & 2 & 3 \\ 7 & 1 & 2 \end{pmatrix}$</td><td>B1</td><td>1.1b</td></tr>
<tr><td></td><td>Maximise $P - V = 0$ where V is the value of the augmented game to A</td><td>B1</td><td>3.3</td></tr>
<tr><td></td><td>$V - 5p_2 - 7p_3 + r = 0$
$V - 5p_1 - 2p_2 - p_3 + s = 0$
$V - 8p_1 - 3p_2 - 2p_3 + t = 0$</td><td>M1
A1</td><td>3.3
1.1b</td></tr>
<tr><td></td><td>$p_1 + p_2 + p_3 + u = 1$</td><td>B1</td><td>3.3</td></tr>
<tr><td>(ii)</td><td><table>
<tr><td>b.v.</td><td>V</td><td>p_1</td><td>p_2</td><td>p_3</td><td>r</td><td>s</td><td>t</td><td>u</td><td>Value</td></tr>
<tr><td>r</td><td>1</td><td>0</td><td>-5</td><td>-7</td><td>1</td><td>0</td><td>0</td><td>0</td><td>0</td></tr>
<tr><td>s</td><td>1</td><td>-5</td><td>-2</td><td>-1</td><td>0</td><td>1</td><td>0</td><td>0</td><td>0</td></tr>
<tr><td>t</td><td>1</td><td>-8</td><td>-3</td><td>-2</td><td>0</td><td>0</td><td>1</td><td>0</td><td>0</td></tr>
<tr><td>u</td><td>0</td><td>1</td><td>1</td><td>1</td><td>0</td><td>0</td><td>0</td><td>1</td><td>1</td></tr>
<tr><td>P</td><td>-1</td><td>0</td><td>0</td><td>0</td><td>0</td><td>0</td><td>0</td><td>0</td><td>0</td></tr>
</table></td><td>M1
A1</td><td>3.3
1.1b</td></tr>
<tr><td></td><td></td><td>(7)</td><td></td></tr>
</table>

(d)	$p_3 = \frac{5}{11}$	B1	1.1b
	$V \leqslant \frac{35}{11},\ V \leqslant \frac{35}{11},\ V \leqslant \frac{58}{11} \Rightarrow V = \frac{35}{11}$	M1	3.1a
	Let Player B play option X with probability q_1, option Y with probability q_2 and option Z with probability q_3	B1	1.1b
	$5q_2 + 8q_3 = \frac{35}{11}$ $7q_1 + q_2 + 2q_3 = \frac{35}{11}$ $q_1 + q_2 + q_3 = 1$	dM1 A1ft	3.1a 1.1b
	Player B should play option X with probability $\frac{4}{11}$, option Y with probability $\frac{7}{11}$ and never play option Z	A1	3.2a
		(6)	
			(17 marks)

Notes:

(a) M1: Clear attempt to find the row maximin and column minimax (either the row minimums or column maximums correct or at least five (of the seven) values stated correctly)

A1: CAO (dependent on all rowmins and colmaxs correct) states $-1 \neq 2$ (or row (maximin) $\neq$ col (minimax) as long as -1 is clearly identified as the row maximin and 2 as the column minimax)

(b) B1: Correct statement – must include the word 'dominate' (or exact equivalent)

B1: Correct inequalities – must be clear that all inequalities must hold

(c)(i)

B1: Correct augmentation – possibly implied by later working

B1: Correct objective defined

M1: At least three equations in V, p_1, p_2, p_3 and at least one dummy variable seen

A1: CAO

B1: Correct probability equation

(ii)

M1: Any two (numerical in nature) row correct

A1: CAO including correct row and column labels for Simplex tableau

(d) B1: p_3 correctly stated

M1: Attempt to find V by substituting probabilities into all three equations or corresponding inequalities involving V, p_1, p_2, p_3 (or using the original value of the game) (Note candidates may reject B plays Z here as V is worse than playing X or Y)

B1: Defining probabilities for Player B

dM1: Dependent on previous M mark - setting up at least three equations in their q_1, q_2, q_3 using their V (or original value) (may be just q and $(1-q)$ if Option Z rejected)

A1ft: Correct three equations (two if Option Z rejected) following through their augmented matrix in (c) – A0 if option R for player A is used (and not rejected later)

A1: Correct options for Player B in context (must say that Player B should never play option Z but this may appear earlier in their working) dependent on previous A mark

Alternative if augmenting by +4

(c)(i)	e.g., augment by +4 $\begin{pmatrix} -3 & 2 & 5 \\ 2 & -1 & 0 \\ 4 & -2 & -1 \end{pmatrix} \rightarrow \begin{pmatrix} 1 & 6 & 9 \\ 6 & 3 & 4 \\ 8 & 2 & 3 \end{pmatrix}$	B1	1.1b
	Maximise $P - V = 0$ where V is the value of the augmented game to A	B1	3.3
	$V - p_1 - 6p_2 - 8p_3 + r = 0$ $V - 6p_1 - 3p_2 - 2p_3 + s = 0$ $V - 9p_1 - 4p_2 - 3p_3 + t = 0$	M1 A1	3.3 1.1b
	$p_1 + p_2 + p_3 + u = 1$	B1	3.3
(ii)		M1 A1	3.3 1.1b

b.v.	V	p_1	p_2	p_3	r	s	t	u	Value
r	1	-1	-6	-8	1	0	0	0	0
s	1	-6	-3	-2	0	1	0	0	0
t	1	-9	-4	-3	0	0	1	0	0
u	0	1	1	1	0	0	0	1	1
P	-1	0	0	0	0	0	0	0	0

		(7)	

(d)	$p_3 = \frac{5}{11}$	B1	1.1b
	$V \leqslant \frac{46}{11},\ V \leqslant \frac{46}{11},\ V \leqslant \frac{69}{11} \Rightarrow V = \frac{46}{11}$	M1	3.1a
	Let Player B play option X with probability q_1, option Y with probability q_2 and option Z with probability q_3	B1	1.1b
	$q_1 + 6q_2 + 9q_3 = \frac{46}{11}$ $8q_1 + 2q_2 + 3q_3 = \frac{46}{11}$ $q_1 + q_2 + q_3 = 1$	dM1 A1ft	3.1a 1.1b
	Player B should play option X with probability $\frac{4}{11}$, option Y with probability $\frac{7}{11}$ and never play option Z	A1	3.2a
	For notes see main scheme above	**(6)**	

	Alternative for **(d)**		
(d)	$p_3 = \frac{5}{11}$	B1	
	Recognises that Option Y dominates Option Z and reduces matrix to either 3 x 2 or 2 x 2 (if A plays R removed) e.g. $\begin{array}{c\|cc} & X & Y \\ \hline Q & -3 & 2 \\ R & 2 & -1 \\ S & 4 & -2 \end{array}$ or $\begin{array}{c\|cc} & X & Y \\ \hline Q & 0 & 5 \\ R & 5 & 2 \\ S & 7 & 1 \end{array}$ or $\begin{array}{c\|cc} & X & Y \\ \hline Q & 1 & 6 \\ R & 6 & 3 \\ S & 8 & 2 \end{array}$	M1	
	Define probabilities for B e.g. play Option X with probability q and Option Y with probability $(1-q)$	B1	
	e.g. $-3q + 2(1-q) \Rightarrow 2 - 5q$ $4q - 2(1-q) \Rightarrow 6q - 2$	dM1	
	e.g. $2 - 5q = 6q - 2$ $q = \frac{4}{11}$	A1ft	
	Player B should play option X with probability $\frac{4}{11}$, option Y with probability $\frac{7}{11}$ and never play option Z	A1	
		(6)	

Notes

(d) B1: p_3 correctly stated

M1: Uses dominance argument (may be implied) to reduce either the original Matrix or their augmented Matrix to either 3 x 2 or 2 x 2 (if A plays R deleted). The Matrix may be transposed and signs changed.

B1: Defining probabilities for Player B (condone use of p instead of q)

dM1: Dependent on previous M mark - setting up at least two equations (using A plays Q and S) or expressions in terms of their q

A1ft: Solves their expressions or equations to obtain q (may use graphical approach). If solving multiple pairs of expressions, they must clearly choose their solution – A0 if option R for player A is used (and not rejected later)

A1: Correct options for Player B in context (must say that Player B should never play option Z but this may appear earlier in their working) dependent on previous A mark

Pearson Education Limited. Registered company number 872828

with its registered office at 80 Strand, London, WC2R 0RL, United Kingdom